PRIVATE SPECIFICATION

ORIGINAL

Prepared for the

SOUTH AFRICAN NAVY

MARITIME REACTION SQUADRON BADGES

NSN: 8455-18-186-4093

SAN 149
APRIL 2010
(Accompanied by SAN 154)

ORIGINAL

INDEX PAGE

PRIVATE SPECIFICATION SAN 149 + SAN 154

MARITIME REACTION SQUADRON

NSN: 8455-18-186-4093

		Page
1.	Scope	1
2.	Requirements	1
3.	Design, workmanship and construction	2
4.	Finish	2
5.	Packing and Marking	2
6.	Special Tender Conditions	5

Tenderer's Comments

ORIGINAL

1. Scope

1.1 This specification covers the materials and design of maritime reaction squadron badges of the South African Navy.

1.2 This specification must be used in conjunction with SAN 154 Revised January 2004.

2. Requirements

2.1 Materials

2.1.1 The independent ships and air/sea rescue flotilla badges shall be manufactured from brass that complies with the relevant requirements for Designation CZ 101 (90/10 brass), condition ½ hard, of BS 2870.

2.1.2 Prongs shall be manufactured from a cold-drawn bright steel wire that complies with the relevant requirements of BS 2763 for wire that has a tensile strength of not less than 1370 MPa and not more than 1570 MPa.

2.1.3 Polypropylene material shall be used to manufacturer the clutch.

2.2 Dimensions

2.2.1 The overall width and height of the independent ships and air/sea rescue flotilla badges shall be 40 mm ± 1.0 mm and 42 mm ± 1.0 mm respectively.

2.2.2 The nominal thickness of the metal used in the manufacturing of the badge shall be 1.10 mm ± 0.05 mm and shall be even throughout the badge.

2.2.3 The prong shall have a diameter of 1.10 mm + 0.05 mm. The effective length of a prong, measured from the bearing surface of the back of the badge to the point of the prong, shall be 6.0 mm ± 1.0 mm, see figure 2.

2.2.4 The shape and nominal dimensions of the clutch shall comply with figure 3. The diameter of the central hole of the clutch for the prong shall be such as to permit full and secure engagement of the prong.

Tenderer's Comments

3. Design, workmanship and construction

3.1 The badge shall be manufactured in one piece of metal and bi-metal plated. The badge shall be die struck and shall comply to the shape and dimensions as given in figure 1.

3.2 The form, shape, type and position of the attaching devices, the design on the face of the badge, and the finish of the badge shall conform to those of the corresponding standard sample approved and held by the South African Navy.

3.3 Every badge shall be inspected and shall be free from defects such as burrs, rough or sharp edges and surface blemishes. Defects shall not effect the appearance or serviceability f the badge.

3.4 Positioning of the prongs (see figure 1) shall be standard on all badges manufactured. The shape and dimensions of the prong shall comply with figure 2.

3.5 Prongs shall be hard-soldered or fusion welded normal to the bearing face of the badge in the centre of east and west of the laurel wreath and the solder joint shall be clean, smooth and free from flux and excess solder.

3.6 The free end of the prong shall have a sharp point that is free from burrs, and at the pointed end shall be grooved to such a distance as to allow for the effective engagement of the polypropylene clutch.

3.7 Clutches shall be white in colour and shall be capable of withstanding a force (tensile) of at least 20N without releasing the prong.

4. Finish

4.1 The finish of the independent ships and air/sea rescue flotilla badges shall comply with the requirements as specified in SAN 154 (Revised January 2004).

5. Packing and Marking

Packing and marking of the independent ships and air/sea rescue flotilla badges shall comply with the requirements of SAN 154 (Revised January 2004).

Tenderer's Comments

Figure 1

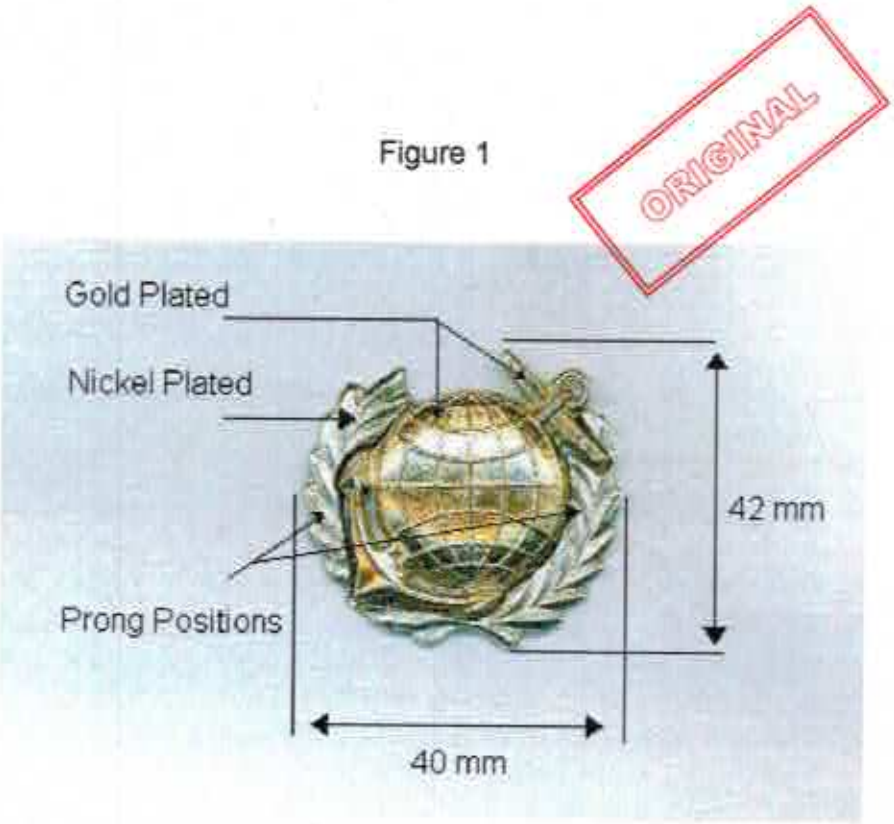

NOTES: 1. Subject to a tolerance of ± 1.0 mm

2. Globe and Anchor to be Gold plated and Laurel Wreath Nickel Plated.

FIGURE 1: Maritime Reaction Squadron Badge

Tenderer's Comments

FIGURE 2

PRONG

ORIGINAL

Dimensions in millimetres

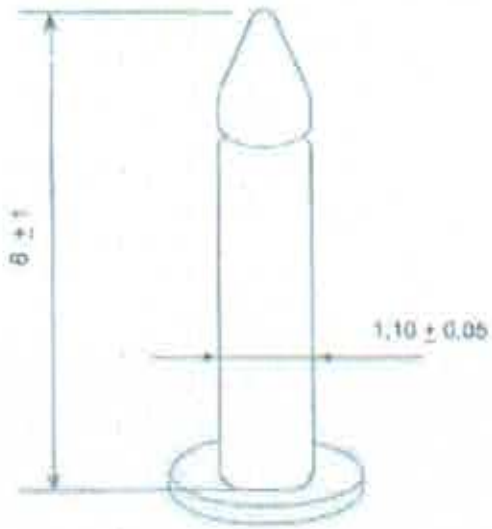

FIGURE 3

SIDE VIEW OF POLYPROPOLENE CLUTCH

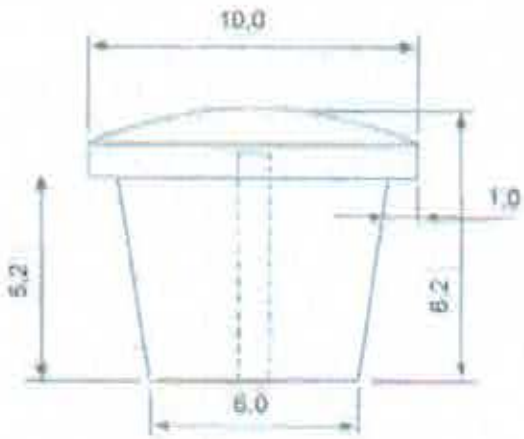

Tenderer's Comments

AMENDMENT

TO SPECIFICATION

SAN 149

A. SPECIAL TENDERER CONDITIONS

A.1. Tenderer must complete this amendment to confirm that the tenderer has read and understood the contents of the specification.

A.2. The specification must be completed as instructed and the Tenderer's comments column (where it is included in specification) be completed with the words "comply" or "not comply" entered alongside each paragraph and sub paragraph. Any deviations are to be entered alongside each paragraph and where the tendere's comments column is omitted from the specification the deviations must be stipulated in a letter. Each paragraph and the bottom of each page are to be initialled.

A.3. The completed specification must be returned with quotation/bid.

A.4. No Capability Report is required for this requirement.

Name (Printed): .....

Signature: ..... Date: .....

SOUTH AFRICAN NAVY

CLOTHING SPECIFICATION
FOR
BADGES
METAL

SAN 154
REVISED JANUARY 2004

INDEX PAGE

PRIVATE SPECIFICATION SAN 154

FOR BADGES METAL

		Page
1.	Scope	1
2.	Definitions	2
3.	Requirements	2
4.	Packing and Marking	10
5.	Sampling and Compliance with the Specification	10
6.	Inspection and Methods of Test	11
7.	Appendix A Special Conditions Inspections	13
8.	Confirmation that Tenderers Complies/ Not Complies with Specification	15

PRIVATE SPECIFICATION

FOR

BADGES, METAL

0. APPLICABLE STANDARDS

0.1 Reference is made to the latest issue of the following standards:

BS 1224	*Electroplated coatings of nickel and chromium*
BS2763	*Specification for round carbon steel wire for wire ropes*
BS 2786	*Brass wire for springs, 2/1 brass*
BS 2870	*Specification for rolled copper and copper alloys: steel, strip and foil*
BS 2873	*Copper and copper alloys, Wire*
BS 6001	*Sampling procedures and tables for inspection by attributes*
SABS 29	*Articles made of gold, silver or their alloys*
SABS 728	*Electroplated coatings of nickel and chromium*

1. SCOPE

This specification covers the requirements for metal badges (of various types) for use on uniforms, caps and berets of the South African Navy.

NOTES:

a. The following requirements will be specified in tender invitations and in each order or contract:

1. The type of badge and the badge identification (see 3.1.2)
2. The type of attaching device, if other than as specified (see 3.2)
3. In the case of composite badges, the style (see 3.5.2)
4. When relevant , the finishes required (see 3.6.1)
5. When relevant, that a polished finish is not required on an uncoated badge (see 3.6.2)
6. In the case of an enamelled finish, the type of finish (see 3.6.5)
7. When so required , additional marking (see 4.3)

b. Special conditions of tender (which covers the conditions of acceptance of the badges) are given in annex A.

2. DEFINITIONS

2.1 For the purpose of this specification the following definitions shall apply:

Acceptable: Acceptable to the South African Navy.
Backing plate: A plate of acceptable thickness and of suitable material, through which the attaching device mounted on the frontal piece of a badge passes for added support of the badge.
Badge identification: The item control number (ICN) followed by the corresponding description.
Composite badge: A badge that consists of at least two parts i.e. frontal piece(s) and backing piece(s) (other than eye shanks , prongs or pins) that are manufactured separately and hard-soldered or riveted together to form the badge to which the attaching devices are secured.
Defective: A badge that fails in one or more respects to comply with the relevant requirements of the specification.
Lot: Not less than 25 and not more than 150 000 badges of the same type, badge identification, finish and (when relevant) style, from one manufacturer, submitted at any one time for inspection and testing.
Natural finish: The colour obtained by polishing (in accordance with 3.6.2) a badge made of uncoated brass, nickel silver or sterling silver.
Nominal: Subject to the tolerances normal to good manufacturing practice.
Significant surface: A surface (of a badge) that is visible when the badge is in position on a uniform, a cap or a beret.

NOTE: In the case of an electroplated badge, the significant surface is that part of the surface not covered by enamel or paint, and that has been polished or electroplated or both.

Single badge: A badge that consist of only one part , other than eye shanks, prongs or pins.
Standard samples: Three badges of each type and badge identification ordered complete in every detail, mounted on cards, sealed, signed and numbered (see A-3.2).

3. REQUIREMENTS

3.1 Design and type

3.1.1 Design

A badge shall have the shape indicated in the corresponding original art work 1) which shall give a three-dimensional effect. The form, shape , type and position of the attaching device, the design on the face of a badge, and the finish of a badge shall conform to those of the corresponding standard sample approved and held by the South African Navy (see A-3.2).

3.1.2 Designation

A badge shall be of the type and badge identification as specified in the order or contract. The types shall be as follows:

a.	Type 1:	Badges, breast
b.	Type 2:	Badges, cap and beret
c.	Type 3:	Badges , collar
d.	Type 4:	Badges, collar, miniature mess dress (MMD)
e.	Type 5:	Badges, rank
f.	Type 6:	Badges, rank, miniature mess dress (MMD)
g.	Type 7:	Badges, miscellaneous, e.g. arm, shoulder title, chevron, insignia, shoulder sleeve
h.	Type 8:	Badges, qualification
I.	Type 9:	Badges with facing-cloth backing

3.2 Attaching devices

Unless otherwise specified in the order or contract, each badge shall have the appropriate (but in the case of Type 2 badges, one of the appropriate) attaching devices given in Column 2 of Table 1.

---

1) Facsimiles of the original art works are obtainable from the Clothing Procurement Section, South African Navy.

3.3 Materials

NOTE: The facing-cloth backing required for Type 9 badges will not be supplied by the South African Navy .

TABLE 1 - ATTACHING DEVICES FOR BADGES

1	2
Type no.	Attaching device
1	Two prongs, two clutches and one backing plate
2	a) Two eye shanks with a split pin passing through the two shanks, b) Two screw shanks and two knurled thumb-nuts, or c) two prongs and two clutches
3	Two prongs and two clutches
4	Two prongs and two clutches
5	Two prongs and two clutches
6	Two prongs and two clutches
7	Two prongs and two clutches
8	Two prongs and two clutches
9	Metal portion attached to the facing-cloth backing by fold-over pins.
* No other attaching device shall be fitted as these badges are sewn to the uniform fabric.	

3.3.1 Badges: Badges shall be manufactured from one, and in the case of some composite badges, from more than one of the following metals:

a. Brass that complies with the relevant requirements for Designation CZ 101 (90/10 brass), condition ½H, of BS 2870.

b. Nickel-silver that complies with the relevant requirements for Designation NS 106 (18% nickel silver, i.e. copper-nickel-zinc) of BS 2870.

c. Silver that complies with the relevant requirements for Designation S925 (also known as sterling silver) of SABS 29.

3.3.2 Eye shanks, screw shanks and knurled thumb-nuts

Eye shanks shall be made from a hard-drawn copper of copper alloy wire, and screw shanks and knurled thumb-nuts shall be of leaded brass, that comply (in all three cases) with the relevant requirements of BS 2873.

3.3.3 Spilt pins

Split pins shall be made from drawn brass wire that complies with the requirements of BS 2786.

3.3.4 Prongs

Prongs shall be made from a cold-drawn bright steel wire that complies with the relevant requirements of BS 2763 for wire that has a tensile strength of not less than 1 370 Mpa and not more than 1 570 Mpa.

3.3.5 Fold-over pins

Fold - over pins shall be made from a soft copper wire that complies with the relevant requirements of BS 2873.

3.3.6 Clutches

Clutches shall be made of an acceptable polypropylene, and shall be capable of withstanding a force (tensile) of at least 20 N without releasing the prong.

3.4 Dimensions

3.4.1 Badges

The nominal thickness of the metal of badges shall be as follows:

Single badges:	:1,10 mm
Composite badges - frontal piece	:0,09 mm
- backing piece	:1,10 mm

3.4.2 Eye shanks

The wire used shall be either round or half round. Round wire shall be 1,5 ± 0,05 mm in diameter. Half-round wire shall have a nominal radius of 0,9 mm shanks shall have formed eyes approximately circular in shape with a nominal inside diameter of 3 mm to take the split pin. The distance between the bearing surface of the back of the badge and the closest point on the periphery of the inside of the eye, shall be 4,5 ± 0,5 mm. Shanks for cap badges shall have a nominal overall length of 9 mm shanks that are used on collar badges shall have a nominal overall length of 8 mm except that on collar badges that are to be used as beret badges, the shanks shall have a nominal length of 9 mm.

3.4.3 Split pins

A split pin shall have a diameter of 1,05 ± 0,05 mm and shall be long enough to span the distance between the eye shanks on a badge.

3.4.4 Prongs

A prong shall have a diameter of 1,10 ± 0,05 mm. The effective length of a prong , measured from the bearing surface of the back of the badge to the point of the prong, shall be 6 ± 1,5 mm.

3.4.5 Fold-over pins

The diameter of a fold-over pin shall be 1,10 ± 0,05 mm and its length shall be such as to be suitable for attaching the badge to the facing-cloth backing.

3.4.6 Screw shanks and knurled Thumb-nuts

Screw shanks shall have a diameter of 2,25 ± 0,05 mm and a length of 13,0 ± 0,05 mm. Knurled thumb-nuts shall have a nominal thickness of 2,4 mm and a nominal external diameter of 9,5 mm.

3.4.7 Clutches

A clutch shall conform to the shape and nominal dimensions given in fig. 1. The diameter of the central hole for the prong shall be such as to permit full and secure engagement of the prong, the colour of the clutches shall be white for the SA Navy.

3.5 Construction

3.5.1 General

A badge shall be a single or composite badge, at the discretion of the manufacturer.

3.5.2 Composite badges

A composite badge shall be of one of the following styles:

a. **Style A composite badges:** A style A composite badge shall consist of a combination of parts made of materials in natural finish only. The parts shall be joined in the following manner:

One to three holes, depending on the size and shape of the badge are drilled in the backing piece of the badge. The frontal piece is put in position and the whole badge then put face downwards, and the two parts hard-soldered together through the holes.

b) **Style B composite badges:** A Style B composite badge shall consist of either:

1. a combination of parts made of materials that have been electroplated (see 3.6.3 and 3.6.4) or bronzed (see 3.6.6); or
2. a combination of a part or parts made of materials that have been electroplated (see 3.6.3 and 3.6.4) or bronzed (see 3.6.6) with a part or parts made of materials in natural finish (see 2.1).

Before the parts are electroplated or bronzed, two or three holes, depending on the size and shape of the badge , are drilled in the backing piece of the badge. Two or three (as relevant) rivets are hard-soldered on the reverse of the frontal piece, in positions corresponding to those of the holes in the backing piece. After or bronzing, the two parts are then joined and the ends of the rivets protruding through the drilled holes are flattened.

3.5.3 Prongs

a) The free end of a prong shall have a sharp point that is free from burrs, and at the pointed end, shall be grooved or serrated for such a distance as to allow effective engagement of the clutch.

b) Prior to polishing, plating, enamelling, painting or bronzing of a badge , the prongs shall be hard-soldered normal to the bearing surface of the badge and shall be so positioned as to give a firm lay of the badge on uniform fabrics. Distortion of prongs during soldering shall be rectified. All soldering shall be clean, strong and smooth, and free from flux and excess solder.

3.4.5 Eye shanks

The requirements given in 3.5.3 (b) shall apply. In addition, eye shanks shall be so aligned that a split pin can be readily inserted through the two eyes.

3.5.5 Fold-over pins

Prior to polishing, plating, enamelling, painting or bronzing of a Type 9 badge, fold-over pins shall be soft-soldered to the bearing surface of the badge. All soldering shall be clean, strong and smooth, and free from flux and excess solder. The badge shall then be secured, in acceptable alignment , to the appropriate facing-cloth backing.

3.5.6 Screw shanks and knurled thumb-nuts

Screw shanks shall be threaded over their entire length with a standard ISO metric M 2,5 x 0,45 thread. Knurled thumb-nuts shall be tapped to match the screw shanks.

3.6.1 General

Where more than one Finnish is required on either a single or a composite badge, each finish shall be as specified in the order or contract.

3.6.2 Polishing

Unless otherwise specified in the order or contract, a badge and the relevant attaching device shall be supplied with a polished finish. Polishing shall be carried out until an acceptably smooth, even surface is obtained. Polishing shall not cause any loss of definition of the details of the design.

3.6.3 Gold plating

Polishing of brass prior to gold plating shall be such as to provide a plated gold colour and finish in accordance with the corresponding standard sample (see A-3.2).

All surfaces of a badge and the relevant attaching device(s) that have to be gold plated shall be electroplated with a uniform deposit of gold. A gold coating shall comply with the following requirements:

a) The minimum gold content of the coating, determined in accordance with 6.2, shall be at least 995 parts per 1 000.
b) The colour of the gold coating on the significant surface shall be an acceptable match to that of the corresponding standard sample (see A-3.2) and when viewed at a nominal distance of 350 mm, the coating shall be free from such defects as blisters, pits, roughness, cracks, stains, discoloration and mechanical damage. There shall be no contract marks from the electroplating process on the significant surface, all surfaces shall be clean, and the coating shall adhere firmly to the basis metal.
c) The thickness of the gold coating, determined in accordance with 6.3, shall be not less than 1 um at any point.
d) When the coating on the face side of a badge is tested in accordance with 6.4, it shall show no evidence of discontinuity.

3.6.4 Nickel-chromium and nickel plating

Polishing prior to nickel-chromium and nickel plating shall be in accordance with 3.6.2. All surfaces of a badge , eye shanks, prongs or pins that have to be plated with nickel-chromium or nickel , shall be electroplated to comply with the requirements of (a) and (c) or (b) and (c) below , as applicable.

a) Nickel-chromium plating shall conform to the requirements for Grade Designation Cu/Ni5b Gr r, Service Conditions 1, of SABS 728, and shall when tested in accordance with 6.5 have the following minimum thickness:

Chromium	: 0,3 um
Total nickel	:5 um

b) nickel plating shall conform to the requirements for Classification no. Cu/Ni 5b of BS 1224, Table 9, and shall, when tested in accordance with 6.5, have a thickness of at least 5 um.

c) The plating on the significant surface shall have a bright finish and shall, when viewed at a nominal distance of 350 mm be free from such defects as blisters, pits, roughness, cracks, stains, discoloration and mechanical damage. There shall be no unplated areas and no contact marks on the significant surface.

3.6.5 Enamelled finishes

a) General

The enamelled finish on the relevant part of an enamelled badge shall be a vitreous enamel or a paint finish, as specified in the order or contract.

When viewed at a nominal distance of 350 mm, the finish shall be free from bubbles, spots, inclusions, cracks and crazing, and shall be confined to the area prescribed by the design.

In addition, the adhesion of the enamel shall be such as to enable it to withstand the test given in 6.6.

b) Vitreous enamel

Enamel of the vitreous type shall be so pigmented that after firing, the colour of the finish is an acceptable match to that specified in the order or contract.

c) Paint

The paint shall be a heat-resistant , non-fading paint of a colour that is an acceptable match to that specified in the order or contract. The paint coating shall be covered with a clear, epoxy resin coating of an acceptable hardness.

3.6.6 Bronze finishes

The bronze finish of a badge shall be light, medium or dark (as appropriate), and shall be an acceptable match to the shade of the corresponding standard sample(s) held by the Heraldry Section.

3.7 Workmanship

Badges shall be free from defects that affect their appearance or may affect their serviceability (or both) and from burrs, rough or sharp edges and surface blemishes.

4. PACKING AND MARKING

4.1 Packing

The badges shall be individually packed (unless otherwise specified e.g. pr.'s etc.) in plastic envelopes, of suitable size and shape, having a pull and press opening and closure. Each plastic envelope shall have a label clearly showing the following information:

a. The manufacturers name or trade mark or both.
b. The year of manufacture.
c. The item description.
d. The ICN-number as on the order.

4.2 Marking

Each carton shall bear the following information given in legible and indelible marking on the carton or on a label that is securely attached to the outside of one end of the carton:

a. The manufacturer's name or trade mark or any combination of these;
b. the type and badge identification (see 3.1.2);
c. the quantity of badges; and
d. the number of the order or contract.

4.3 Additional marking

When so required by the South African Navy, cartons shall bear information additional to that specified in 4.2.

5. SAMPLING AND COMPLIANCE WITH THE SPECIFICATION

5.1 Sampling

The following sampling procedure shall be used in determining whether a lot complies with the relevant requirements of the specification. The samples so taken shall be deemed to represent the lot for the respective properties.

5.1.1 Sample for inspection

From the lot take at random the number of badges shown in Column 2 of Table 2, relative to the appropriate lot size given in Column 1.

5.1.2 Sample for testing

From the lot or, after inspection, from the sample taken in accordance with 5.1.1, take at random the appropriate number of badges, as relevant, shown in Column 4 of Table 2.

5.2 Compliance with the specification

The lot shall be deemed to comply with the requirements of the specification if:

a) on inspection of the sample taken in accordance with 5.1.1, the number of defectives found does not exceed the appropriate acceptance number given n Column 3 of Table 2; and
b) on testing the sample taken n accordance with 5.1.2, no defective is found.

6. INSPECTION AND METHODS OF TEST

6.1 Inspection

Visually examine and, when relevant, measure (using a suitable measuring device) each badge in the sample taken in accordance with 5.1.1 for compliance with all the relevant requirements of this specification for which tests to assess compliance are not given in 6.2-6.6 (inclusive).

TABLE 2 - SAMPLE SIZES

1	2	3	4
	Sample for inspection		
Lot size, badges	Sample size	Acceptance No. (AQL = 1,5)	Sample for testing + badges
25-90	8	0	3
91-280	32	1	3
281-500	50	2	5
501-1200	80	3	5
1201-3200	125	5	8
3201-10 000	200	7	8
10 001-35 000	315	10	8
35 100-150 000	500	14	13

* Based on Table II-A of BS 6001 for General Inspection level II.
\+ Based on Table II-A of BS 6001 for Special Inspection level S-2 (AQL=1,5)

6.2 Composition of material

Use any acceptable test method to test each badge in the sample taken in accordance with 5.1.2.

6.3 Thickness of gold deposit

Use an acceptable nn-destructive test method (e.g. an instrument operating on the beta-ray back-scatter principle) to determine the thickness of the gold deposit on the face side of the badge.

6.4 Acid test for gold coatings

6.4.1 Reagent

A 50 % (V/V) aqueous solution of nitric acid d at 25 °/25°C = 1,42), maintained at 18 ± 2 °C.

6.4.2 Procedure

Immerse , to a suitable depth, the face side only of the badge under test in the acid for 60 ± 2 s.

6.4.3 Assessment

Regard the evolution of gas bubbles during the immersion, the imparting of a blue colour to the acid solution, or a definite change in the appearance of the face side of the badge removal from the acid solution , as evidence of discontinuity in the gold coating.

Only regard pinpoint defects as evidence of discontinuity if there are more than six such defects on the face side of a badge. Disregard the evolution of gas bubbles at the edges of an enamelled finish.

6.5 Thickness of nickel and chromium deposits

Use an acceptable test method (e.g. coulometric method).

6.6 Test for adhesion of vitreous enamel coatings

Applying a nominal load of 10 N, draw a sharp-pointed instrument across the surface of the enamel in such a way as to cut through the enamel to the basis metal. Deem a badge to have passed the test if the enamel does not flake or chip off.

APPENDIX A

SPECIAL CONDITIONS OF TENDER

A-1 INSPECTING AUTHORITY

Unless otherwise stated, the South African Bureau of Standards, or a testing authority deputed by the SA Navy shall be the inspecting authority.

A-2 STANDARD SAMPLES , PRE-PRODUCTION AND POST-PRODUCTION STAMPINGS

A-2.1 GENERAL PROCEDURE

A-2.1.1 Plaster models and lead impressions

a) When badges of a new design are required or when a new hob or die has to be made, a plaster model shall have been made and approved by the Staff Officer, South African Navy, before the die is cut for the production of lead impressions. Two lead impressions shall then be submitted to that Senior Staff Officer, Logistic Management, South African Navy: Telephone no.(012) 339 4130 for approval.

b) When any change to an existing hob or die has been made, two lead impressions shall be submitted to Staff Officer, South African Navy, for approval.

A-2.1.2 Pre-production samples

Written approval of lead impressions will be sent to the manufacturer, who , on receipt of the approval , may produce the pre-production samples that are, after approval, to become standard samples.

A-2.2 Standard samples

In the case of new designs, or where any change has been made to the design of the hob or die, or when called for by the South African Navy, three standard samples shall be made all of which shall be submitted to the Staff Officer South African Navy, prior to production being commenced by the manufacturer. Each of these samples shall conform exactly in detail, colour , from and finish to the badges that are to be manufactured during production. Each sample will be mounted on a card, of size 127 mm x 75 mm, that is sealed and signed by the Staff Officer , South African Navy. The cards will be treated as follows:

a) Sample 1 will be permanently retained by the South African Navy as a master sample;

b) Sample 2 will be sent by the South African Navy to the inspecting authority for approval, and if approved , retention;

NOTE: Approval of this sample will not involve any property that requires assessment by a destructive test, but will be limited to approval of construction, design, colour, dimensions, polish and general finish.

c) On approval by the inspecting authority, the three samples will become standard samples, and standard sample 3 will be sent by the South African Navy to the successful tenderer, who shall associate this sample with the order for the badges required. A manufacturer shall not commence production until the Standard Sample 3 has been received from the SABS.

A-3 INSPECTIONS AND TESTING

A-3.1 The badges shall be subject to inspection during the course of manufacture. The inspector shall, during normal working hours, be given all reasonable facilities for carrying out his duties and shall have the right of entry into the contractor's factory and the factory or works of any subcontractor where work on badges supplied to this specification may be in progress.

A-3.2 The contractor shall inspect the finished badges for compliance with this specification before submitting them to the inspecting authority for final inspection.

A-3.3 Before acceptance, the badges shall have been inspected and tested for compliance by the inspecting authority, and found to comply with the requirements of the specification.

A-4 DOCUMENTATION

One carton of each consignment shall be marked "DOCUMENTS" , and in addition to the badges, shall contain the following:

a) The packing slip /delivery note;
b) where applicable , the inspection certificate(s);
c) a copy of the invoice containing the following information:

1. the order number;
2. the financial authority number;
3. a full description of the consignment , i.e. item control number, quantity, etc.

6. **Compliance with Tender Conditions**

6.1. Tenderers must sign this page confirming that they have read and understands the contents of specification SAN 154.

6.2. Tenderers Offer or Comments. Any deviations or comments with regard to the contents of this specification must be in writing and to be attached to the specification.

6.3. Indicate in the appropriate block

A

No Comments	

B

Comments See Attached Letter	

Print Name:.....

Signature:.....

Date:.....